MANUFACTURERS AWA SUPERVISED SERVICE

TECHNICAL INFORMATION AND SERVICE DATA

VOLKSWAGEN CRUISER

CAR RADIOS

MODELS 968A AND 969A

ISSUED BY
AMALGAMATED WIRELESS (AUSTRALASIA) LTD.

GENERAL DESCRIPTION

These models are 6 volt, vibrator operated, six valve, permeability tuned superheterodyne car radios designed for the reception of the Medium Wave Band.

Features of design include: High gain i.f. transformer; permeability tuning unit with a high degree of electrical and mechanical stability (press button on 968A, manual on 969A); low drift oscillator circuit; continuously variable tone control; high sensitivity loudspeaker.

ELECTRICAL AND MECHANICAL SPECIFICATIONS

Frequency Range	530-1650 Kc/s. (566-182 Metres)
Intermediate Freqency	455 Kc/s.
Battery Voltage	6 volts
Battery Consumption	5 amps.
Loudspeaker 7" x 5" PM.	39931
Loudspeaker Transformer	21455A
V.C. Impedance	15 ohms at 400 c/s.
Undistorted Power Output	2 watts

Valve Complement:

V1 Radiotron 6BA6	R.F. Amplifier
V2 Radiotron 6BE6	Converter
V3 Radiotron 6BA6	I.F. Amplifier
V4 Radiotron 6AV6	Det., A.V.C., A.F. Amplifier
V5 Radiotron 6AQ5	Output
V6 Radiotron 6X4	Rectifier

Controls:

Manual Tuning, Press-button Tuning (set of 5 on Model 968A), Volume, Tone and Power.

Manufacturer's Setting of Adjustments.

The receiver is tested by the manufacturer with precision instruments and all adjusting screws, except the aerial trimmer, are sealed. Re-alignment should be necessary only when components in tuned circuits are repaired or replaced, or when it is found that the seals over the adjusting screws have been broken.

It is especially important that the adjustments should not be altered unless in association with the correct testing instruments listed below.

For all alignment operations connect the "low" side of the signal generator to the receiver chassis, and keep the generator output as low as possible to avoid A.V.C. action.

When the generator is connected to the aerial terminal, use the dummy aerial as shown in the diagram.

Testing Instruments.

(1) A.W.A. Junior Signal Generator, type 2R7003, or

(2) A.W.A. Modulated Oscillator, series J6726.
If the modulated oscillator is used, connect a 0.25 megohm non-inductive resistor across the output terminals.

(3) A.W.A. Output Meter, type 2M8832, or

(4) Marconi Receiver Tester, type TF888/3 (combined Signal Generator and Output Meter).

ALIGNMENT TABLE

NOTE: The replacement of any valve in the receiver will not affect the alignment of the tuned circuits in any way providing the recommended Radiotron type is used.

A. General:

Order	Connect "High" Side of Generator to:	Tune Generator to:	Tune Receiver to:	Adjust for maximum peak output:
1	6BE6 Pin 7*	455 Kc/s.	L.F. Limit	T2 Sec. Core (Top)
2	6BE6 Pin 7*	455 Kc/s.	L.F. Limit	T2 Pri. Core (Bottom)
3	6BE6 Pin 7*	455 Kc/s.	L.F. Limit	T1 Sec. Core (Top)
4	6BE6 Pin 7*	455 Kc/s.	L.F. Limit	T1 Pri. Core (Bottom)
	Repeat the above adjustments until the maximum output is obtained.			
5	Aerial Terminal via Dummy Aerial.	1650 Kc/s. (accurate)	H.F. Limit	H.F. Osc. Adj. (C10)
6	Aerial Terminal via Dummy Aerial.	1500 Kc/s.	1500 Kc/s.	H.F. R.F. Adj. (C6)
7	Aerial Terminal via Dummy Aerial.	1500 Kc/s.	1500 Kc/s.	H.F. Aer. Adj. (C1)
8	Aerial Terminal via Dummy Aerial.	600 Kc/s.	600 Kc/s.	L.F. Osc. Padder Adj. (L5)§
	Repeat adjustments 5, 6, 7 and 8 until no further adjustment is possible.			
9	**Calibration Alignment:** With the receiver connected to an aerial, the dial scale calibration should now be checked and corrected if necessary. The pointer can be moved relative to the dial scale by turning the eccentric stud located underneath the rear end of the pointer arm.			

* A 0.01 uF capacitor should be connected in series with the high side of the test instrument.
§ Rock the tuning control back and forth through the signal.

B. Tuner Alignment:

The adjustment of the three tuning cores will be necessary only if a tuning core or coil has been replaced. To make this adjustment proceed as follows:—

(1) Adjust the manual drive control until a 0.560" gauge can be slipped into the left rear slot in front of the carriage lug. Use the 0.560" gauge in the manner of a feeler gauge.
(2) Tune the signal generator accurately to 1000 Kc/s. and connect it to the aerial terminal via the dummy aerial.
(3) Adjust the Oscillator Core followed by the Aerial and R.F. Cores until the maximum output is obtained.
(4) Proceed with adjustments 5, 6, 7 and 8 in Table "A" and then repeat adjustment 3 above, if necessary.
(5) Seal the tuning core studs.

AERIAL CABLE No. 33229

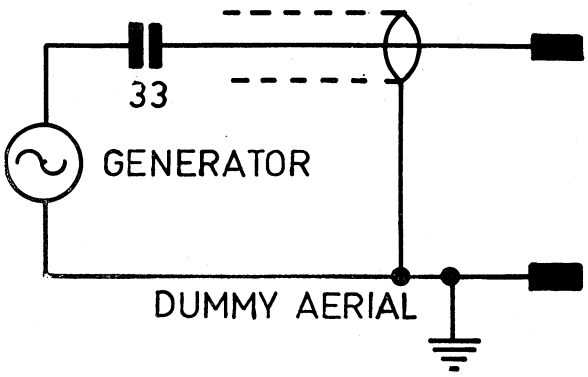

D.C. RESISTANCE OF WINDINGS

WINDING	RESISTANCE IN OHMS
Aerial Choke (L1)	1.2
Tuning Coil, Aerial (L2)	9
Tuning Coil, R.F. (L3)	9
Tuning Coil, Oscillator (L4)	9
Oscillator Padder Coil (L5)	19
I.F. Transformer Windings	16
L.T. R.F. Choke (L6, L7)	*
Loudspeaker Input Transformer (T3):	
Primary	400
Secondary	1.3
Vibrator Transformer (T4):	
6V Primary	*
Secondary	1100

The above readings were taken on a standard chassis, but substitution of materials during manufacture may cause variations and it should not be assumed that a component is faulty if a slightly different reading is obtained.

* Less than 1 ohm.

SOCKET VOLTAGES

VALVE	Cathode to Chassis Volts:	Chassis Volts: Screen Grid to	Anode to Chassis Volts:	Heater Volts:
6BA6 (R.F.)	0	95	45	6
6BE6	0	80	165	6
6BA6 (I.F.)	0.9	95	165	6
6AV6	0	—	90*	6
6AQ5	9.0	165	190	6
6X4	200	—	240/240 A.C. R.M.S.	6

Oscillator Grid Current = 280-340 microamps over tuning range.

Total H.T. Current (at rectifier cathode) = 48mA.

Total L.T. Current = 5 Amps.

The above measurements were taken with an AVO Model 8 meter (20,000 ohms per volt) and with 6.3 volts applied to the receiver. However, these measurements may vary slightly if a different type of meter is used. This applies particularly to the voltage marked.*

MECHANICAL REPLACEMENT PARTS

ITEM	PART No.
Tuning Unit (968A):	
Bracket, Manual Drive	35106
Bush Assembly, Crown Gear	34688
Coil and Shield Assembly	35998
Drive Shaft Bushing	34665
Drive Spindle Assembly	39928
Pointer Assembly	36537
Slug, Tuning	35102
Tuning Unit Assembly	39925
Tuning Unit (969A):	
Bracket, Manual Drive	35961
Bush Assembly, Crown Gear	35979
Coil and Shield Assembly	35998
Drive Shaft Bushing	39985
Drive Spindle Assembly	39884
Pointer Assembly	35969
Slug, Tuning	35102
Tuning Unit Assembly	39982
Chassis:	
Cover, Transformer	33220
Lamp Holder Assembly	4194
Nut, Mounting	492071
Power Cable, L.T. Female	35479
Power Cable, L.T. Male	34355

ITEM	PART No.
Socket 7 Pin	794568
Socket, Vibrator 4 Pin Wafer	793051
Miscellaneous:	
Aerial Assembly	39950
Cable Assembly; Aerial	38211
Dial Scale (968A)	32246
Dial Scale (969A)	37941A
Escutcheon Assembly (968A)	37924
Escutcheon Assembly (969A)	39990
Knob Assembly, Rear Concentric	39923
Knob Assembly, Tone	39920
Knob Assembly, Tuning	39921
Knob, Push Button	
Plate, Dial Backing (969A)	39993
Plate, Diffusion (968A)	35188A
Plate, Mounting (969A)	39992
Trimplate (968A)	38207
Seal (968A)	39938
Aerial, Side Cowl:	
Ball, Moulded	36704
Gasket, Rubber	39957
Insulator, Moulded	39952
Nut	38247
Telescopic Section Assembly	39951

When ordering, always quote the above Part Numbers and in the case of coloured parts, such as cabinets, knobs, etc., the colour plus the Part Number.

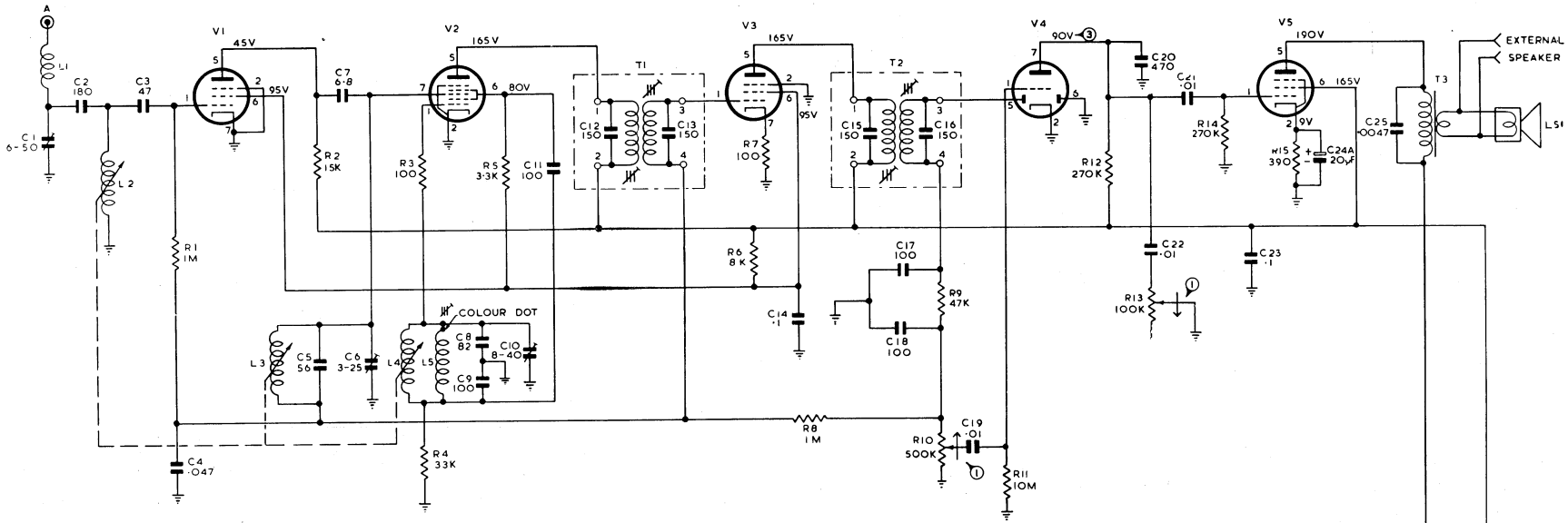

BASE CONNECTIONS.

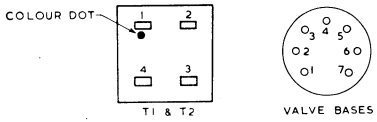

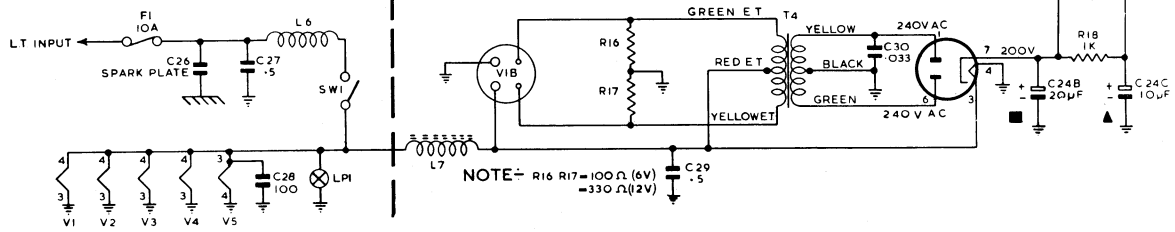

NOTE:- R16 R17 = 100 Ω (6V)
= 330 Ω (12V)

NOTE:- ① ARROW INDICATES DIRECTION OF CLOCKWISE ROTATION

② VOLTAGES MEASURED ON A 20,000 OHM / VOLT METER, WITH VOLUME & TONE CONTROLS MAX. CLOCKWISE AND NO SIGNAL INPUT.

③ VOLTAGE VARIES WITH METER SENSITIVITY

CIRCUIT CODE—CAR RADIO 968A, 969A

No.	DESCRIPTION	No.	No.	Location	No.	Location
	RESISTORS					
	All Resistors ± 20% Carbon unless otherwise stated					
R1	1 Megohm ½ watt	618008	2	K10	4	L10
R2	15K ohms 1 watt	612916	2	K11	4	K11
R3	100 ohms ½ watt	604022	2	C10	4	D10
R4	33K ohms ½ watt	614455	2	F13	4	F13
R5	3.3K ohms ½ watt	610304	2	E12	4	F12
R6	2 x 15K ohms in parallel 1 watt	612916	2	K16	4	L15
R7	100 ohms ± 10% ½ watt W.W.	602061	2	B13	4	B13
R8	1 Megohm ½ watt	618008	2	C12	4	D12
R9	47K ohms ½ watt	614956	2	B11	4	C11
R10	500K ohms Log. Carbon Volume	37202	2	B5	4	B5
R11	10 Megohms ½ watt	619404	2	A8	4	B8
R12	270K ohms 1 watt	616952	2	J13	4	J13
R13	100K ohms Log. Carbon Tone (with R10)		2	B4	4	B5
R14	270K ohms ½ watt	616953	2	K12	4	K12
R15	390 ohms ± 10% 1 watt	600673	2	L12	4	M12
R16	100 ohms ± 10% ½ watt W.W.	602061	2	C16	4	D15
R17	100 ohms ± 10% ½ watt W.W.	602061	2	B16	4	C15
R18	1K ohms ± 10% 2 watts	600881	2	K16	4	K15
	CAPACITORS					
C1	6-50pf trimmer (Aerial)	31954	1	A7	3	B6
C2	150pf ±5% silvered mica	222696	2	M8	4	M8
C3	47pf ±5% N750 tubular	220554	2	M10	4	M10
C4	0.047uf ±20% 200VW paper	226834	2	F13	4	F13
C5	56pf ±5% N750 tubular	221771	2	K11	4	K10
C6	3-25pf trimmer (R.F.)	33304	1	H9	3	E10
C7	6.8pf ±20% N750 bead	221499	2	K11	4	K11
C8	82pf ±5% N750 tubular	222128	2	D10	4	D10
C9	100pf ±5% N.P.O. tubular	221605	2	G12	4	G12
C10	8-40pf trimmer (Osc.)	231185	2	G11	4	G11
C11	100pf ±10% 500VW silvered mica	226814	2	D12	4	E12
C12	150pf ±5% silvered mica	226618	In 1st I.F.			
C13	150pf ±5% silvered mica	226618	In 1st I.F.			
C14	0.1uf ±20% 400VW paper	227017	2	L15	4	M15
C15	150pf ±5% silvered mica	226618	In 2nd I.F.			
C16	150pf ±5% silvered mica	226618	In 2nd I.F.			
C17	100pf +100%—0% K5000	221605	2	A10	4	B10
C18	100pf +100%—0% K5000	221605	2	B11	4	C11
C19	0.01uf ±20% 200VW paper	226310	2	B7	4	B7

CODE	DESCRIPTION	PART	No.	Location	No.	Location
C20	470pf ±20% K1200	221972	2	B8	4	C8
C21	0.01uf ±20% 400VW paper	226311	2	J13	4	J13
C22	0.01uf ±20% 400VW paper	226311	2	B8	4	C8
C23	0.1uf ±20% 400VW paper	227017	2	L17	4	L17
C24A	20uf 25VW } Electrolytic	229304	2	J16	4	J16
C24B	20uf 450VW } Electrolytic					
C24C	10uf 350VW } Electrolytic					
C25	0.0047uf ±20% 600VW paper	225985	2	K14	4	K14
C26	Spark Plate		1	M10	3	M10
C27	0.5uf ±20% 200VW Hunts W48	229116	1	L7	3	M7
C28	100pf ±10% 500VW silvered mica	226814	2	M12	4	M12
C29	0.5uf ±20% 200VW Hunts W48	229116	2	C17	4	C16
C30	0.033uf ±10% 600VW paper	226731	2	H15	4	H15
	INDUCTORS					
L1	Aerial Choke	34336	1	B8	3	B8
L2	Tuning Coil (Aerial) } Assembly	35005	2	H9	4	H9
L3	Tuning Coil (R.F.) } Assembly		2	E9	4	E9
L4	Tuning Coil (Osc.) } Assembly		2	G9	4	G9
L5	Oscillator Padder Coil	35471	2	E11	4	E11
L6	L.T. Choke	35472	1	K7	3	L7
L7	L.T. Choke	36926	2	A14	4	B17
	TRANSFORMERS					
T1	1st I.F. Transformer	35458	2	D12	4	D12
T2	2nd I.F. Transformer	35458	2	B11	4	B11
T3	Audio Output Transformer	21455A	1	B15	3	C15
T4	Vibrator Transformer	25863	1	G15	3	G15
	VALVES					
V1	Radiotron 6BA6		2	L11	4	L11
V2	Radiotron 6BE6		2	D11	4	D11
V3	Radiotron 6BA6		2	B12	4	B12
V4	Radiotron 6AV6		2	B9	4	B9
V5	Radiotron 6AQ5		2	L12	4	L12
V6	Radiotron 6X4		2	J14	4	J14
	MISCELLANEOUS					
LS1	7" x 5" Permanent Magnet Speaker	39931				
SW1	Power On/Off Switch (on R10)		2	B6	4	B6
VIB	Vibrator Cartridge V5105		2	B15	4	C15
F1	10 Amp Fuse	370013				

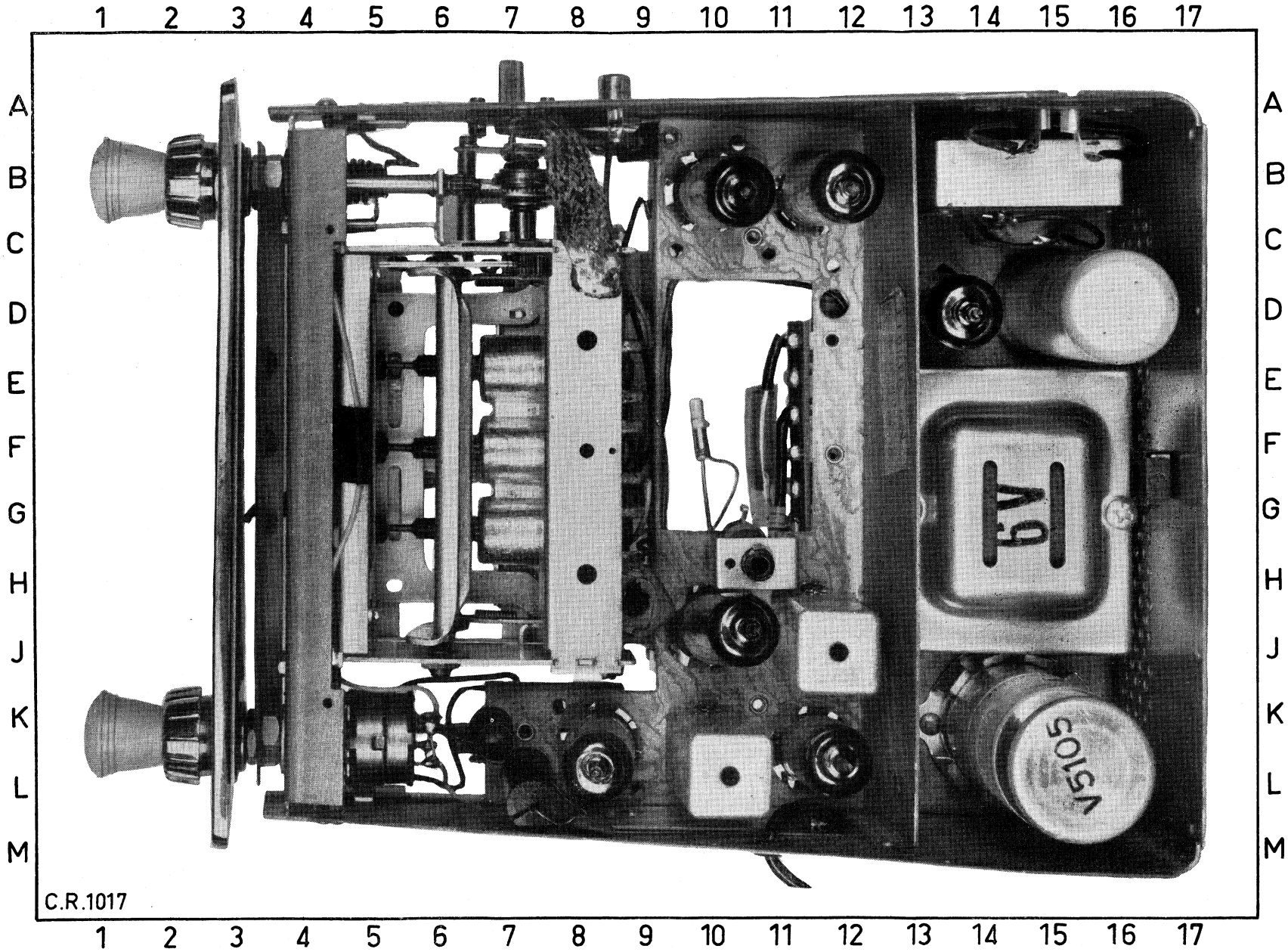

FIG. 1

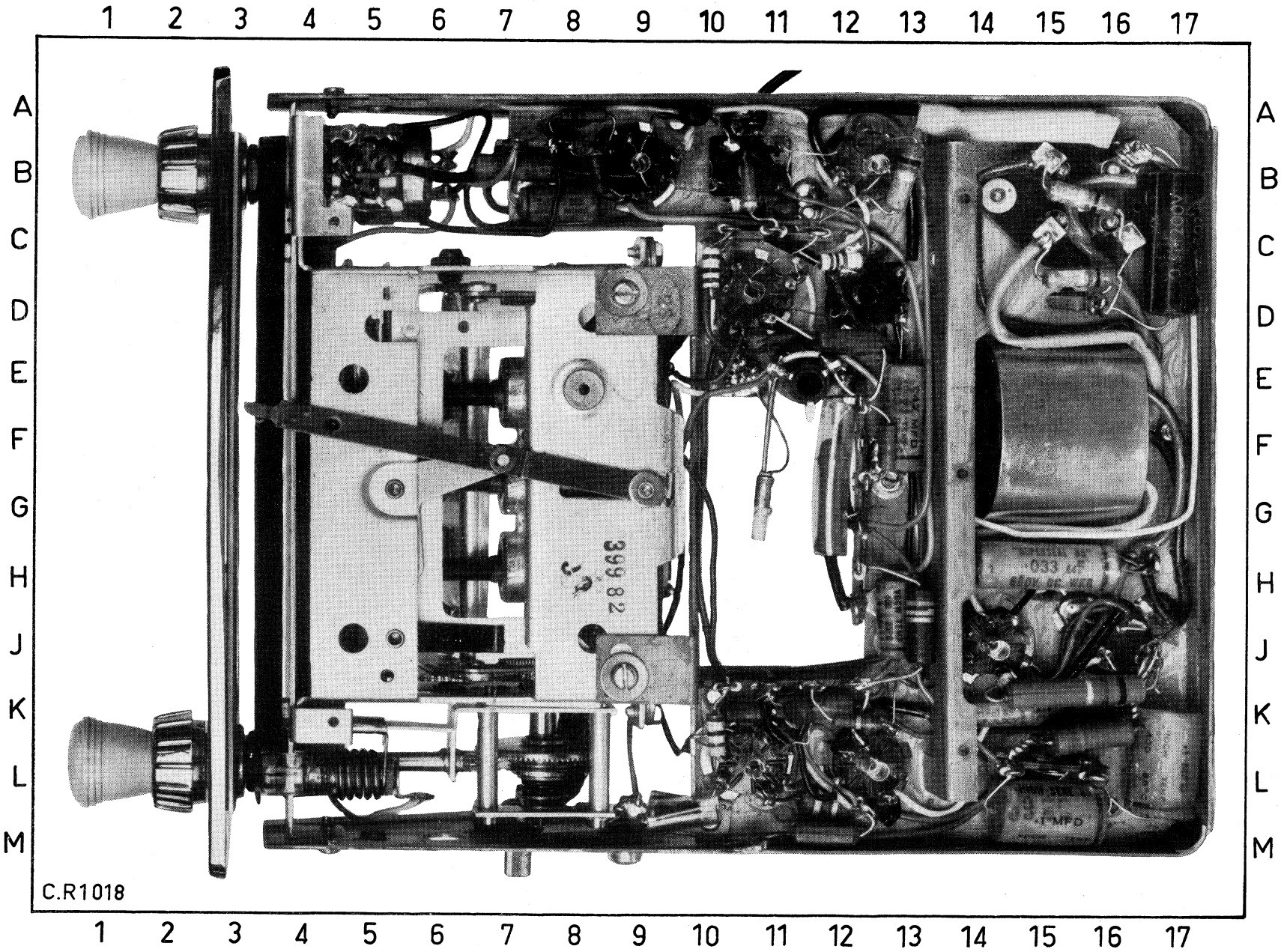

FIG. 2

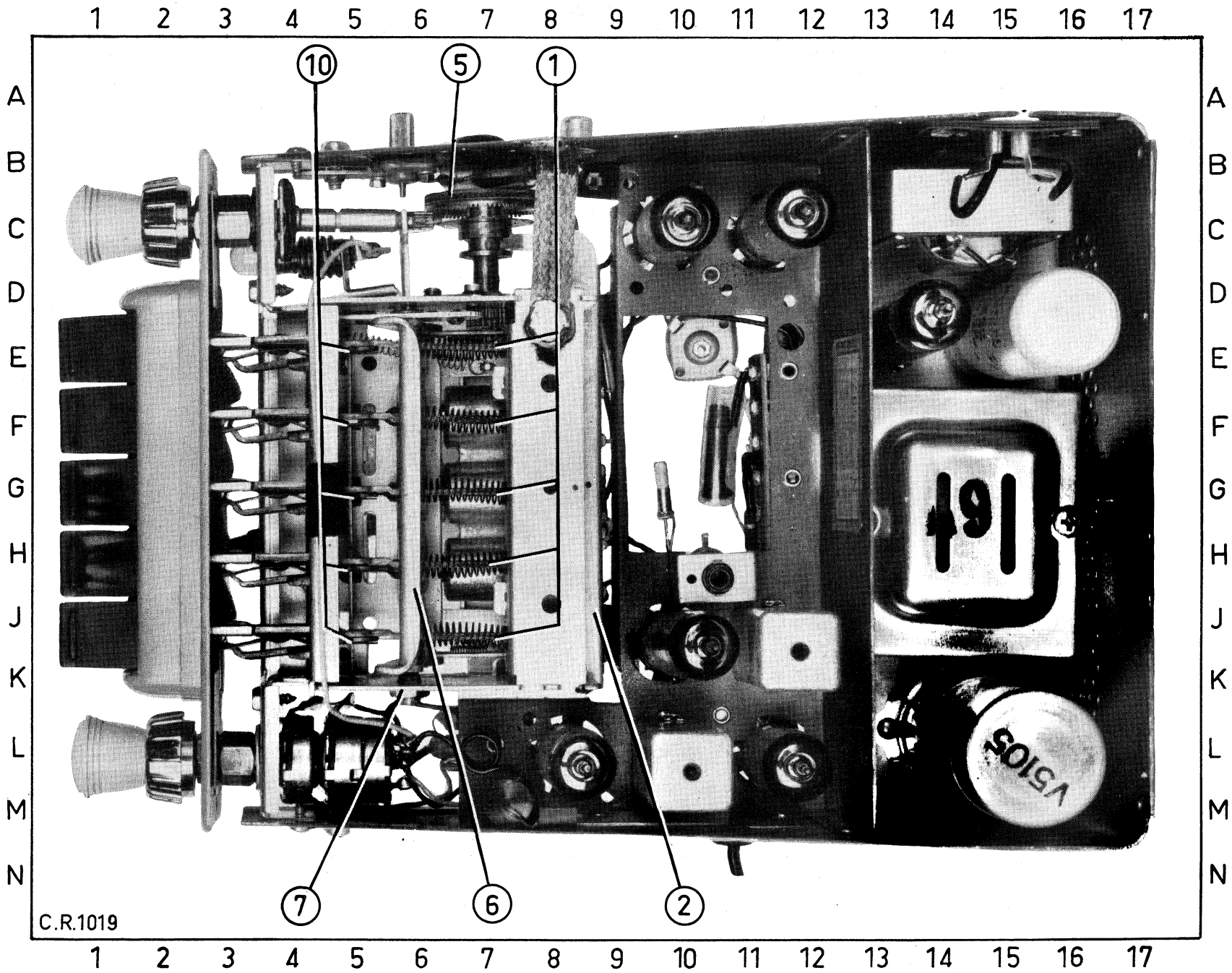
1 2 3 4 5 6 7 8 9 10 11 12 13 14 15 16 17
A B C D E F G H J K L M N
10
5
1
7
6
2
C.R.1019
V5105

FIG. 3

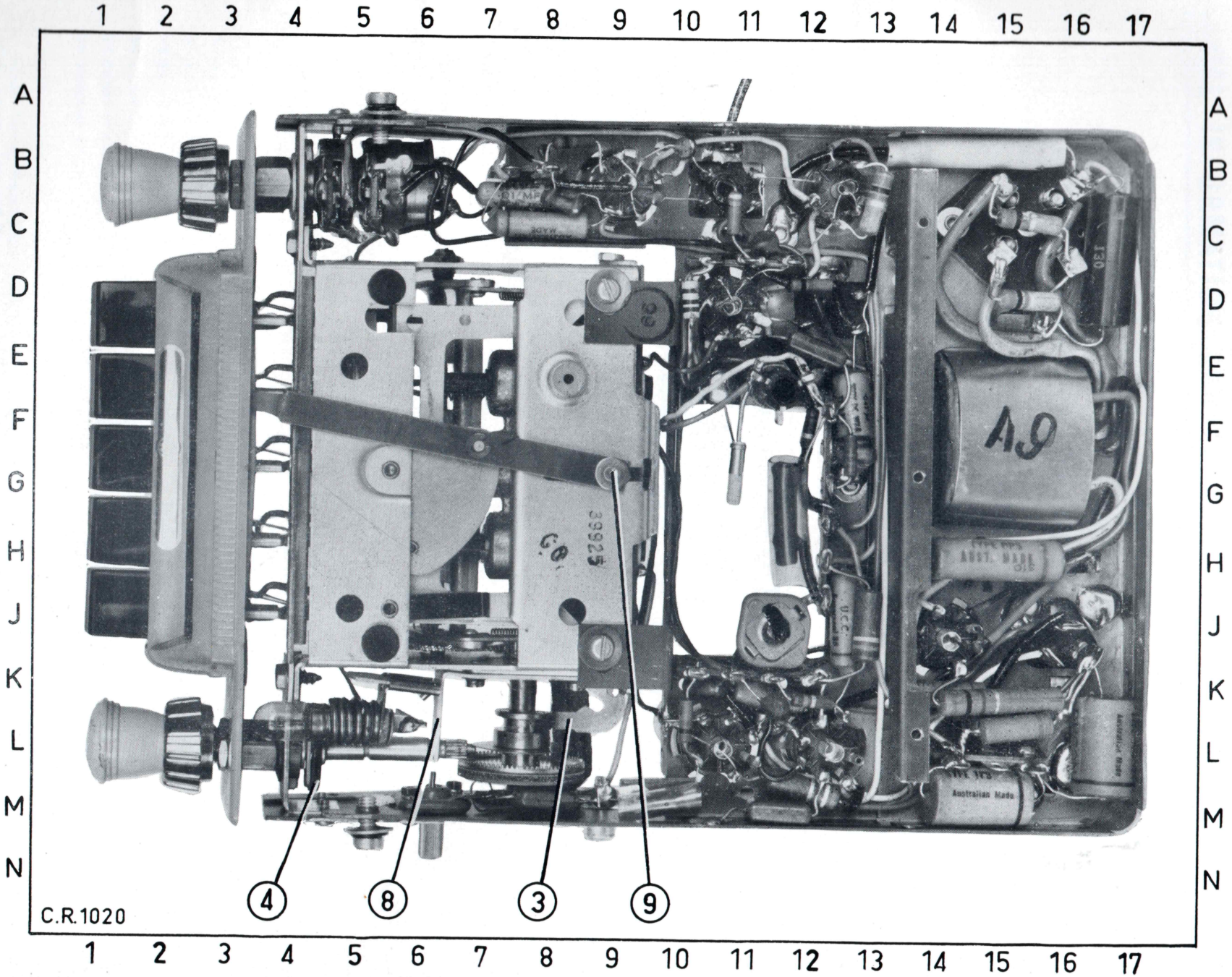

FIG. 4